NSF International
789 Dixboro Rd. Ann Arbor, MI 48015, USA
1-800.NSF.MARK | +1-734.769.8010 | www.nsf.org

TEST REPORT

Send to: 88630

Mr. Cormac Fitzpatrick
FM Environmental
Greenbank Industrial Estate
Newry City, County Down
Northern Ireland BT34 2QX

Facility: 88631

FM Environmetal
Malta_ LtdWater Technology House A15B Marsa
Industrial Estate
Marsa, MRS3000
Malta

Result:	**PASS**	**Report Date:**	**11-FEB-2015**

Customer Name:	FM Environmental Ltd.
Test To:	ASME A112.14.3-2000 / PDI G101-2012 - NSF Mechanical Plumbing Program
Description:	GGX-15 | Grease Removal Device
Test Type:	Qualification Retest
Test Location:	NSF International, Ann Arbor, MI
Job Number:	J-00163403
Project Number:	W0142208
Project Manager:	Marie Majerus

Thank you for having your product tested by NSF International.

Please contact your Project Manager if you have any questions or concerns pertaining to this report.

Report Authorization:

David Orton

Digitally signed by David Orton
DN: cn=David Orton, o=NSF International, ou=Engineering Lab, email=orton@nsf.org, c=US
Date: 2015.02.11 16:55:04 -05'00'

Senior Engineer, Engineering Lab

This report shall not be reproduced, except in its entirety, without the written approval of NSF. This report does not represent NSF Certification or authorization to use the NSF Mark. Authorization to use the NSF Mark is limited to products appearing in the Company's Official NSF Listing (www.nsf.org). The results relate only to those items tested, in the condition received at the laboratory.

PDF created with pdfFactory trial version www.pdffactory.com

PDI G101 Section 5.1 Media Analysis **COMPLETE**

pH value	n/a
Lard specific gravity	0.881
Viscosity	n/a

PDI G101 Section 5.4 Flow Rate Verification **COMPLETE**

Type of Grease Interceptor	Type A	
Size of Flow Controller	0.927	inches
Flow Time 1 Sink 1+2	109.8	sec
Flow Time 2 Sink 1+2	110.5	sec
Flow Time 3 Sink 1+2	109.7	sec
Flow Time Average Sink 1+2	110.0	sec
Flow Rate Average Sink 1+2	15.5	gpm
Deviation from Req Average Sink 1+2	3.6	%
Flow Time 1 Sink 2+1	108.7	sec
Flow Time 2 Sink 2+ 1	111.2	sec
Flow Time 3 Sink 2+ 1	109.0	sec
Flow Time Average Sink 2+1	109.6	sec
Flow Rate Average Sink 2+1 (gpm)	15.6	gpm
Deviation from Req Average Sink 2+1	4.0	%
Max allowable deviation from average	5	%
Max allowable deviation between runs	5.0	%
Max deviation between runs	2.2	%
Flow rate acceptable?	Yes	

Note: Flow rates verified using NSF's laboratory flow controller.

PDI G101 Section 7.7 Efficiency Determinations (Rated Grease Capacity) **PASS**

Model	GGX-15	
Flow	15	GPM
Flow Restrictor ID	0.927	inches
Pounds Grease Retained at 13th Increment	35.74	lbs.
Incremental Efficiency	87.3	%
Average Efficiency	91.6	%
Required Total Amount of Grease Retained	33.75	lbs.
Actual Total Amount of Grease Retained	35.74	lbs.

PDF created with pdfFactory trial version www.pdffactory.com

ASME A112.14.3 Section 2 General Requirements **PASS**

Design	PASS
Rating	PASS
Inlet and Outlet Connections	PASS
Flow Controls and Vents	PASS

ASME A112.14.3 Section 3.5 Rating Test (Grease Retention Capacity) **PASS**

Model	GGX-15	
Flow	15	GPM
Flow Restrictor Type	A	
Flow Restrictor ID	0.927	inches
Breakdown Increment Number *	15	
Pounds Grease Retained	40.72	lbs.
Incremental Efficiency	81.3	%
Average Efficiency	90.5	%
Efficiency A	90.5	%
Efficiency B	na	%
Required Amount of Grease Retained	30	lbs.
Actual Amount of Grease Retained	40.72	lbs.

ASME A112.14.3 Section 4.1 Labelling **NOT APPLICABLE**

Not applicable for Grease Removal Devices.

ASME A112.14.3 Section 4.2 Installation Instructions **NOT APPLICABLE**

Not applicable for Grease Removal Devices.

ASME A112.14.3 Section 4.2 Maintenance Instructions **NOT APPLICABLE**

Not applicable for Grease Removal Devices.

PDF created with pdfFactory trial version www.pdffactory.com

STANDARD ASME A112.14.3 GREASE INTERCEPTOR RATING TEST FORM

Interceptor Manufacturer:	**FM Environmental**	**Model Number:**	**GGX-15**	**GPM Size:**	**15**	**Report No.:**	**J-00163403**
Sink Capacity and Flow	******Lard Data******	******Flow Control Data******		*****Test Lab Information*****			
Capacity No. 1	15 gal	**Spec. Gravity**	**0.881**	**Orifice Size:**	0.927	**Test Lab: NSF International**	**Test Date:** **27-Jan-15**
Capacity No. 2	15 gal	**Viscosity**	**na**				Notes:
Separate No. 1	16.1 GPM					**Test Technicians:**	1. Drainage gauged on clear compartment
Separate No. 2	15.9 GPM					**Jon McGaugh**	
Simultaneous	15.5 GPM					**Rob Harris**	
Simultaneous	15.6 GPM						2. The "amount retained" is a calculation of "Added" minus "Skimmed"

					******** INCREMENTAL ********				********ACCUMULATED ********			
					(drop-skim)/ drop x 100 = efficiency				(drop-skim) / drop x 100 = efficiency			
No.	Test	Clear	Sec.	Rate:GPM	lb. Added	lb. Skimmed	lb. Retained	Efficiency	lb. Added	lb. Skimmed	lb. Retained	Efficiency
1	1	2	110.5	15.5	3	0.00	3.00	100.0	3.00	0.00	3.00	100
2	2	1	110.7	15.5	3	0.06	2.94	98.0	6.00	0.06	5.94	99
3	1	2	109.5	15.6	3	0.15	2.85	95.0	9.00	0.21	8.79	98
4	2	1	110.5	15.5	3	0.22	2.78	92.7	12.00	0.43	11.57	96
5	1	2	109.8	15.6	3	0.24	2.76	92.0	15.00	0.67	14.33	96
6	2	1	110.1	15.5	3	0.27	2.73	91.0	18.00	0.94	17.06	95
7	1	2	110.3	15.5	3	0.30	2.70	90.0	21.00	1.24	19.76	94
8	2	1	109.7	15.6	3	0.29	2.71	90.3	24.00	1.53	22.47	94
9	1	2	110.1	15.5	3	0.28	2.72	90.7	27.00	1.81	25.19	93
10	2	1	110.0	15.5	3	0.32	2.68	89.3	30.00	2.13	27.87	93
11	1	2	110.1	15.5	3	0.33	2.67	89.0	33.00	2.46	30.54	93
12	2	1	109.1	15.7	3	0.42	2.58	86.0	36.00	2.88	33.12	92
13	1	2	108.8	15.7	3	0.38	2.62	87.3	39.00	3.26	35.74	92
14	2	1	109.7	15.6	3	0.46	2.54	84.7	42.00	3.72	38.28	91
15	1	2	109.3	15.6	3	0.56	2.44	81.3	45.00	4.28	40.72	90
16	2	1	109.10	15.7	3	0.77	2.23	74.3	48.00	5.05	42.95	89
17	1	2	110.22	15.5	3	1.03	1.97	65.7	51.00	6.08	44.92	88
18	2	1	109.51	15.6	3	1.84	1.16	38.7	54.00	7.92	46.08	85
19	1	2										
20	2	1										
21	1	2										
22	2	1										
23	1	2										
24	2	1										
25	1	2										
26	2	1										
27	1	2										
28	2	1										
29	1	2										
30	2	1										
31	1	2										
Average Or Total			109.83	15.6	54	7.92	46.08					

3. All Skimmed weights taken after de-watering by Seperatory funnel and chilling.

Summary & Adjusted Results based on the totals at the increment when Grease retained equals 2 times rated capacity

Req retention:	**30**
Increment #	11
1) Total Skimmed:	2.46
2) Total Retained :	30.54
3) Total Added:	33.00
Eff. = (line 3 – line1) / line 3	
Efficiency % =	**92.5**

Summary and Results based on the testing to "maximum grease capacity."

Break down Increment No.	**15**
1) Total Skimmed :	4.28
2) Total Retained :	40.72
3) Total Added :	45.00
Eff. = (line 3 – line1) / line 3	
Efficiency % =	**90.5**

PDF created with pdfFactory trial version www.pdffactory.com

PDF created with pdfFactory trial version www.pdffactory.com

STANDARD PDI-G101 GREASE INTERCEPTOR RATING TEST FORM #1

Interceptor Manufacturer:	**FM Environmental**	**Model Number:**	**GGX-15**	**GPM Size:**	**15**	**Report No.:**	**J-00163403**
Sink Capacity and Flow	****Lard Data****	****Flow Control Data****		***Test Lab Information***			
Capacity No. 1	15 gal	**Spec. Gravity**	**0.881**	**Orifice Size:**	0.927	**Test Lab: NSF International**	**Test Date:** **27-Jan-15**
Capacity No. 2	15 gal	**Viscosity**	**na**				Notes:
Separate No. 1	16.1 GPM					**Test Technicians:**	1. Drainage gauged on clear compartment
Separate No. 2	15.9 GPM					**Jon McGaugh**	
Simultaneous	15.5 GPM					**Rob Harris**	
Simultaneous	15.6 GPM						2. The "amount retained" is a calculation of "Added" minus "Skimmed"

					******** INCREMENTAL ********				********ACCUMULATED ********			
					(drop-skim)/ drop x 100 = efficiency				(drop-skim) / drop x 100 = efficiency			
No.	Test	Clear	Sec.	Rate:GPM	lb. Added	lb. Skimmed	lb. Retained	Efficiency	lb. Added	lb. Skimmed	lb. Retained	Efficiency
1	1	2	110.5	15.5	3	0.00	3.00	100.0	3.00	0.00	3.00	100
2	2	1	110.7	15.5	3	0.06	2.94	98.0	6.00	0.06	5.94	99
3	1	2	109.5	15.6	3	0.15	2.85	95.0	9.00	0.21	8.79	98
4	2	1	110.5	15.5	3	0.22	2.78	92.7	12.00	0.43	11.57	96
5	1	2	109.8	15.6	3	0.24	2.76	92.0	15.00	0.67	14.33	96
6	2	1	110.1	15.5	3	0.27	2.73	91.0	18.00	0.94	17.06	95
7	1	2	110.3	15.5	3	0.30	2.70	90.0	21.00	1.24	19.76	94
8	2	1	109.7	15.6	3	0.29	2.71	90.3	24.00	1.53	22.47	94
9	1	2	110.1	15.5	3	0.28	2.72	90.7	27.00	1.81	25.19	93
10	2	1	110.0	15.5	3	0.32	2.68	89.3	30.00	2.13	27.87	93
11	1	2	110.1	15.5	3	0.33	2.67	89.0	33.00	2.46	30.54	93
12	2	1	109.1	15.7	3	0.42	2.58	86.0	36.00	2.88	33.12	92
13	1	2	108.8	15.7	3	0.38	2.62	87.3	39.00	3.26	35.74	92
14	2	1	109.7	15.6	3	0.46	2.54	84.7	42.00	3.72	38.28	91
15	1	2	109.3	15.6	3	0.56	2.44	81.3	45.00	4.28	40.72	90
16	2	1	109.10	15.7	3	0.77	2.23	74.3	48.00	5.05	42.95	89
17	1	2	110.22	15.5	3	1.03	1.97	65.7	51.00	6.08	44.92	88
18	2	1	109.51	15.6	3	1.84	1.16	38.7	54.00	7.92	46.08	85
19	1	2										
20	2	1										
21	1	2										
22	2	1										
23	1	2										
24	2	1										
25	1	2										
26	2	1										
27	1	2										
28	2	1										
29	1	2										
30	2	1										
31	1	2										
Average Or Total			109.83	15.6	54	7.92	46.08					

3. All Skimmed weights taken after de-watering by Seperatory funnel and chilling.

Summary and results based on testing per Section 7.7 "rated capacity." The total grease skimmed was taken at the thirteenth increment.

1) Total Skimmed:	3.26
2) Total Retained :	35.74
3) Total Added:	39.00
Eff. = (line 3 – line1) / line 3	
Efficiency % =	**91.6**

Summary and Results based on the testing per Section 7.6 "maximum grease capacity."

Break down Increment No.	**15**
1) Total Skimmed :	4.28
2) Total Retained :	40.72
3) Total Added :	45.00
Eff. = (line 3 – line1) / line 3	
Efficiency % =	**90.5**

PDF created with pdfFactory trial version www.pdffactory.com

Manufacturer: FM Environmental Model Number: GGX-15 GPM Size: 15

Test Number: J-00163403

Drawing and Dimensions of unit tested

Drawing is a cross-section in a plane perpendicular to the cover passing through the inlet and outlet ports with all internal components in place. Length, width, and height are noted

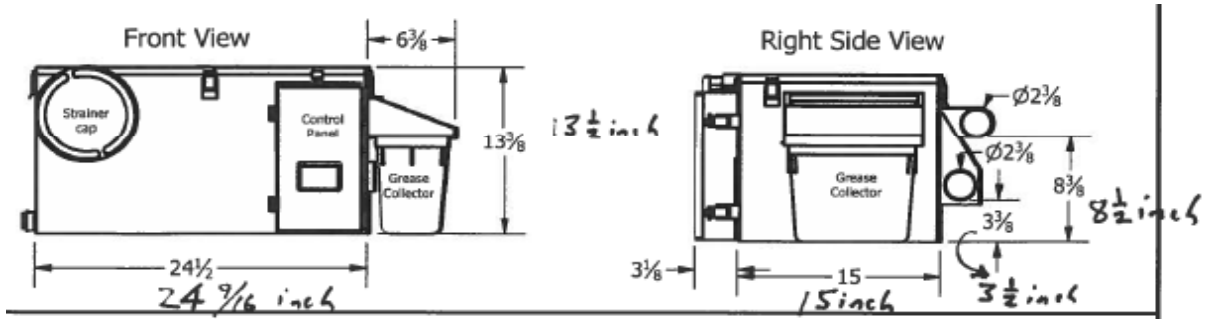

The unit as described above was tested in accordance to PDI G-101 and has conformed with or exceeded all requirements for certification.

Test Technician: David Orton David Orton Digitally signed by David Orton DN: cn=David Orton, o=NSF International, ou=Engineering Lab, email=orton@nsf.org, c=US Date: 2015.02.11 16:55:20 -05'00'

(signature/electronic signature)

Date: 2/11/2015